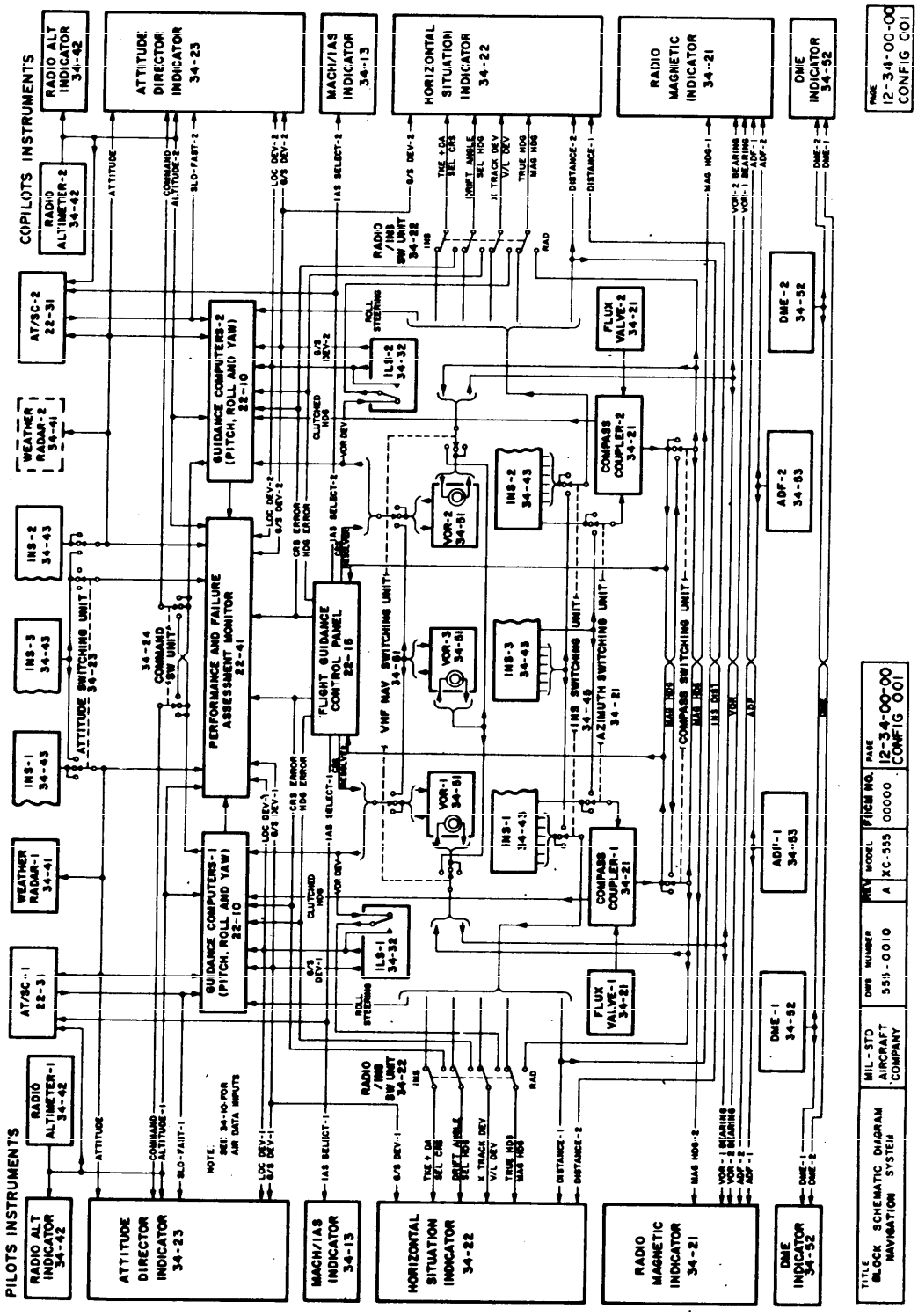

FIGURE 20. BLOCK SCHEMATIC DIAGRAM

THIS SAMPLE DRAWING IS INFORMATIONAL ONLY AND COMPLETE TO THE DEGREE NECESSARY TO ILLUSTRATE A TYPE OF DRAWING. ACTUAL FORMAT AND DRAWING SHALL CONFORM TO THE TEXTUAL REQUIREMENTS SET FORTH IN THIS STANDARD.

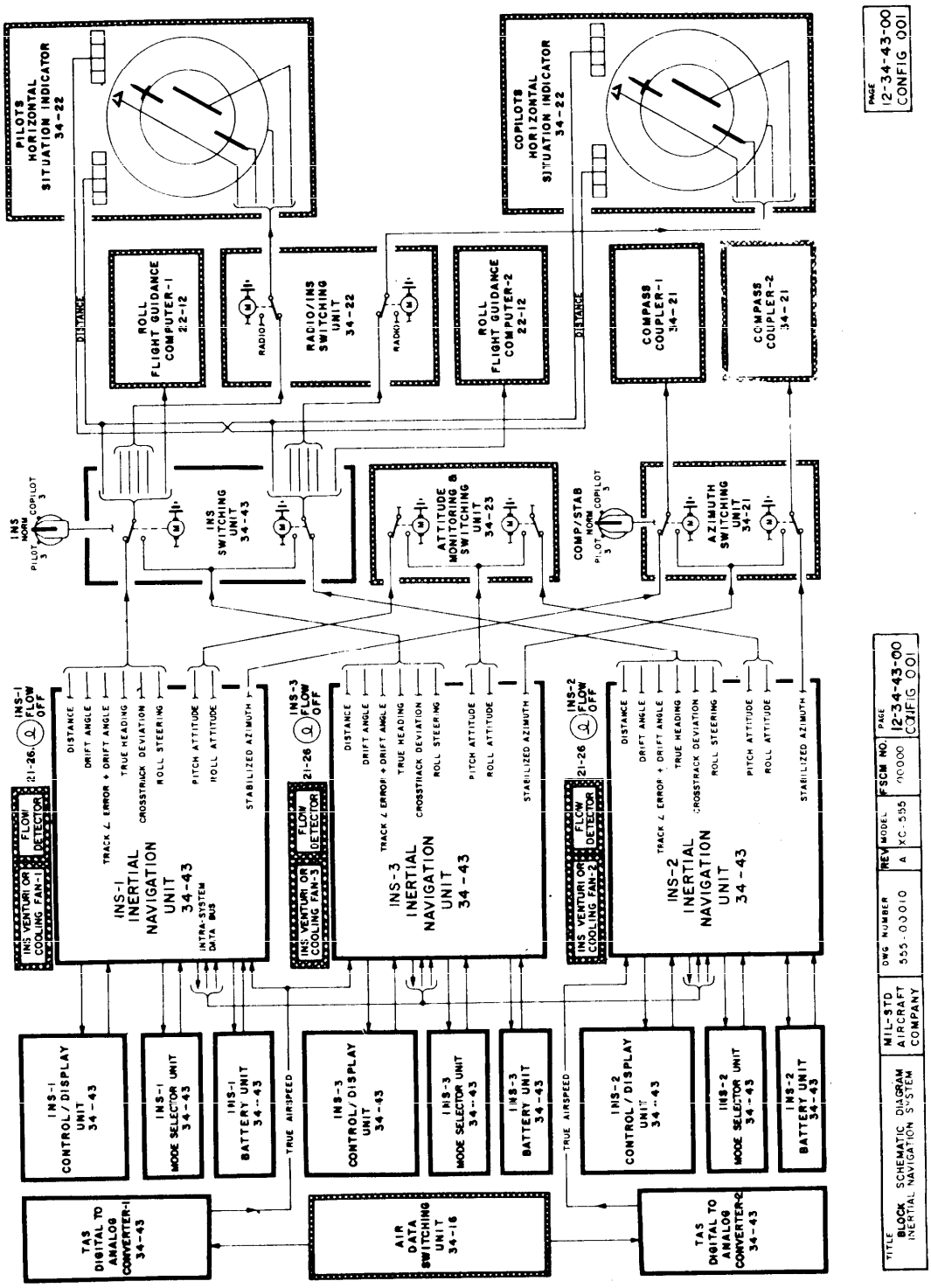

FIGURE 21. BLOCK SCHEMATIC DIAGRAM

THIS SAMPLE DRAWING IS INFORMATIONAL ONLY AND COMPLETE TO THE DEGREE NECESSARY TO ILLUSTRATE A TYPE OF DRAWING. ACTUAL FORMAT AND DRAWING SHALL CONFORM TO THE TEXTUAL REQUIREMENTS SET FORTH IN THIS STANDARD.

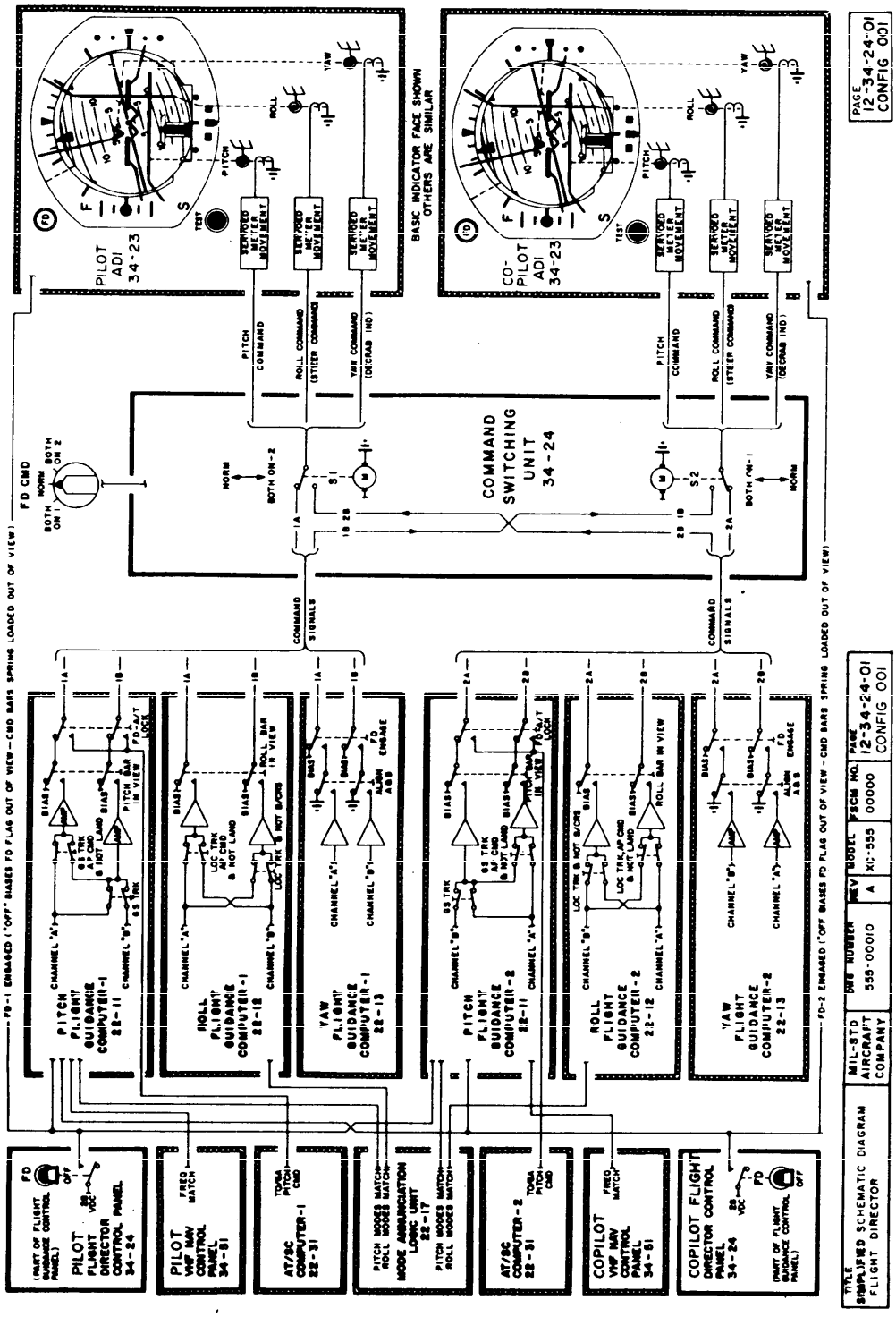

FIGURE 22. SIMPLIFIED SCHEMATIC DIAGRAM

THIS SAMPLE DRAWING IS INFORMATIONAL ONLY AND COMPLETE TO THE DEGREE NECESSARY TO ILLUSTRATE A TYPE OF DRAWING. ACTUAL FORMAT AND DRAWING SHALL CONFORM TO THE TEXTUAL REQUIREMENTS SET FORTH IN THIS STANDARD.

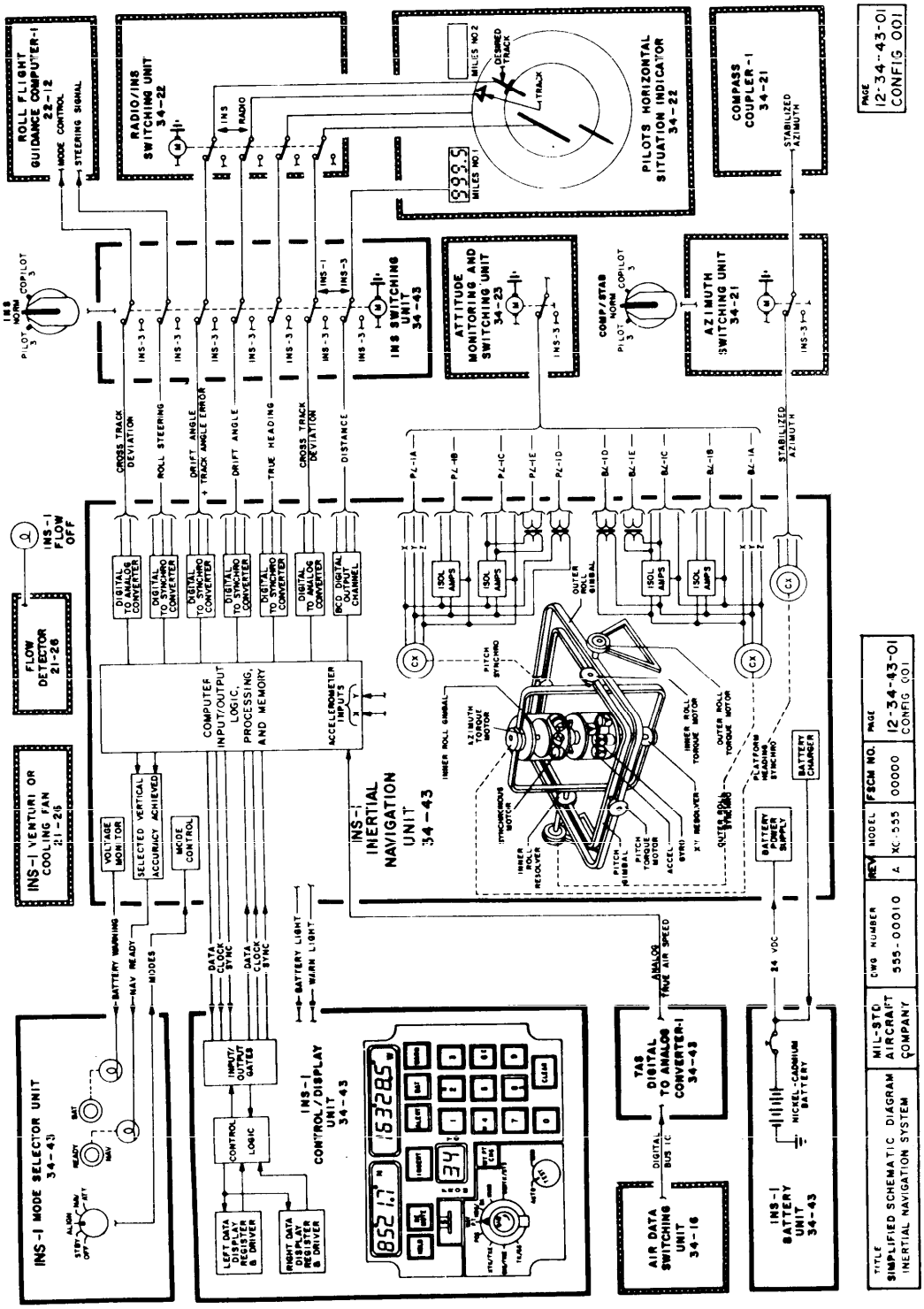

FIGURE 23. SIMPLIFIED SCHEMATIC DIAGRAM

THIS SAMPLE DRAWING IS INFORMATIONAL ONLY AND COMPLETE TO THE DEGREE NECESSARY TO ILLUSTRATE A TYPE OF DRAWING. ACTUAL FORMAT AND DRAWING SHALL CONFORM TO THE TEXTUAL REQUIREMENTS SET FORTH IN THIS STANDARD.

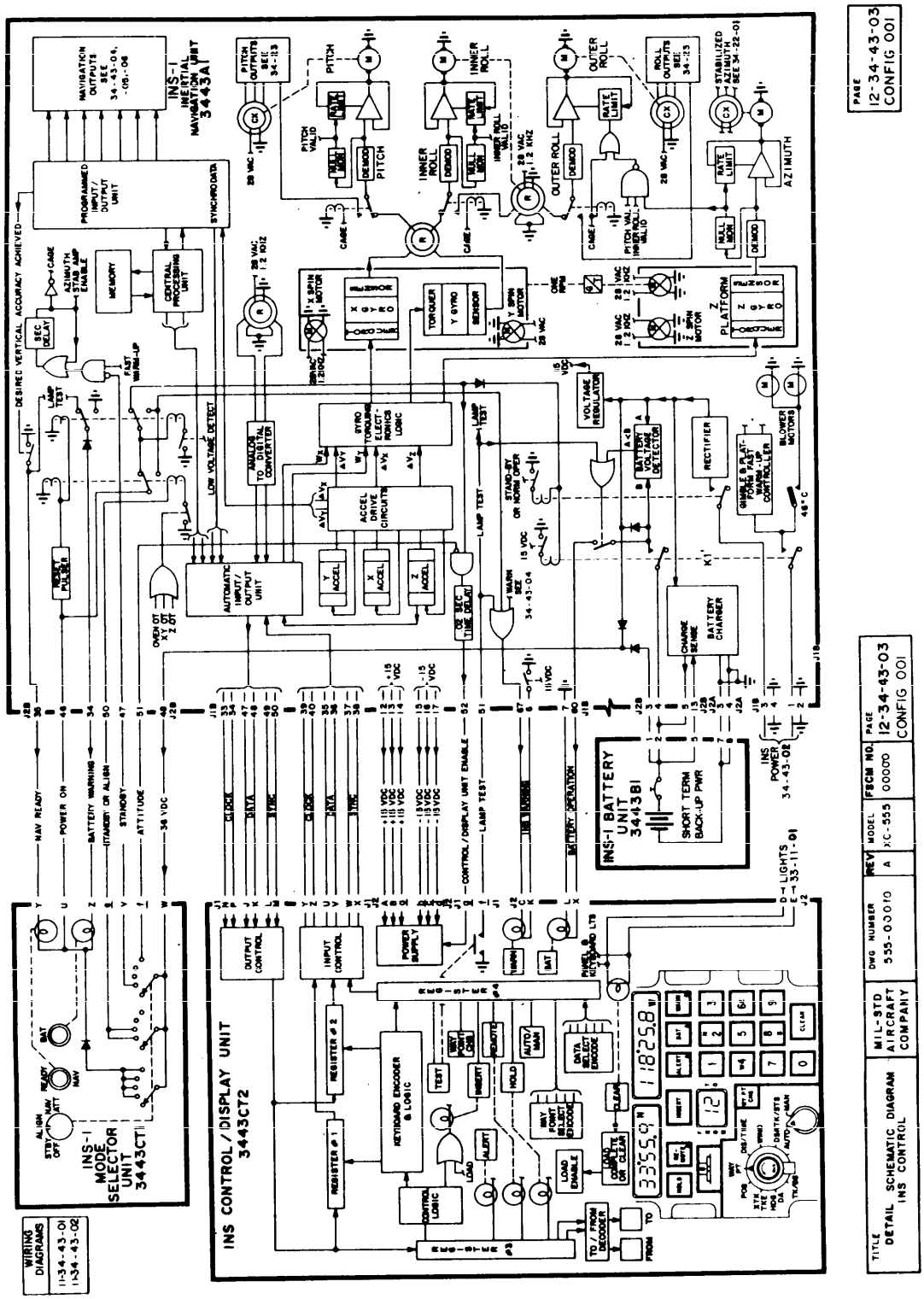

FIGURE 24. DETAIL SCHEMATIC DIAGRAM

THIS SAMPLE DRAWING IS INFORMATIONAL ONLY AND COMPLETE TO THE DEGREE NECESSARY TO ILLUSTRATE A TYPE OF DRAWING. ACTUAL FORMAT AND DRAWING SHALL CONFORM TO THE TEXTUAL REQUIREMENTS SET FORTH IN THIS STANDARD.

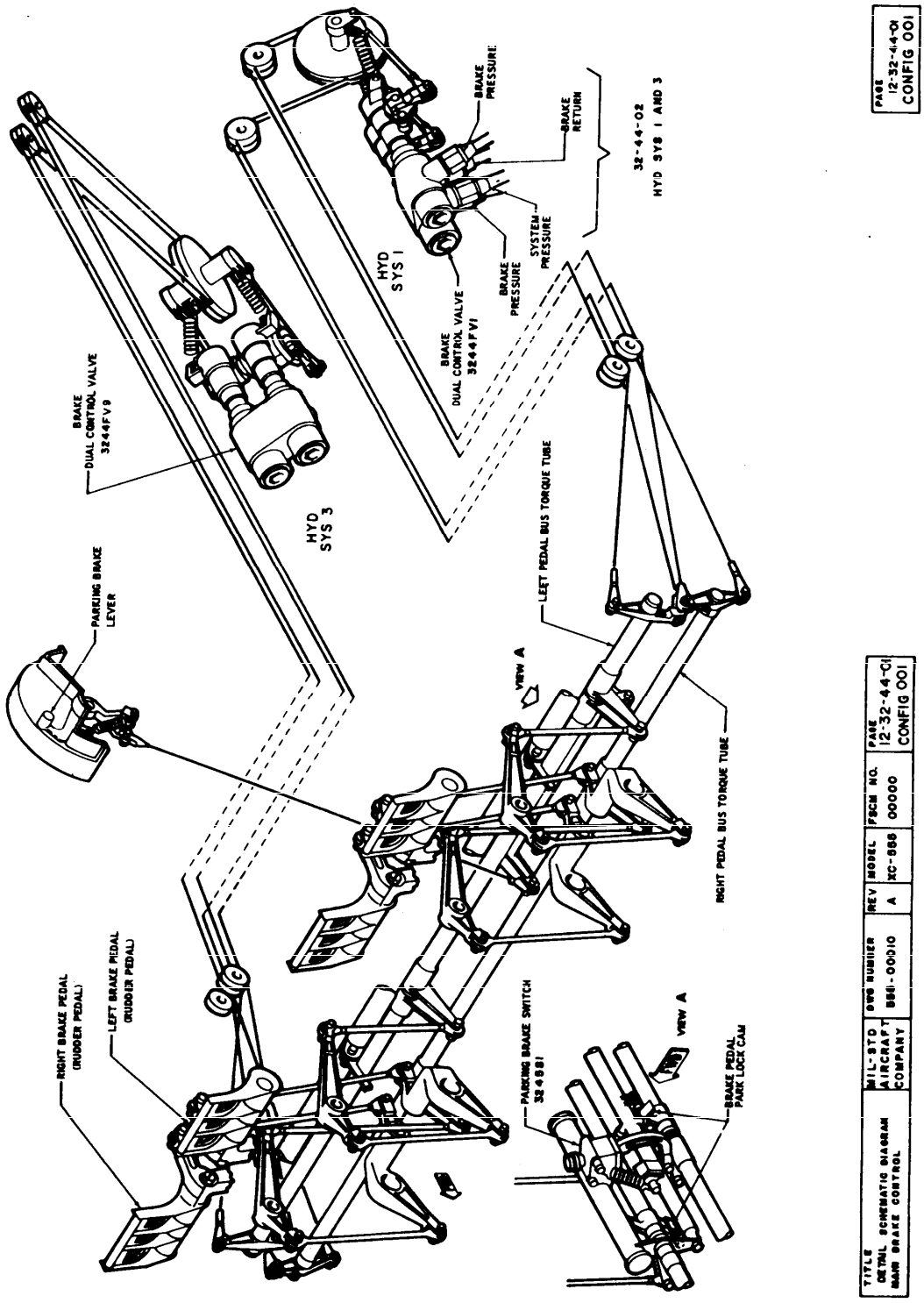

FIGURE 25. DETAIL SCHEMATIC DIAGRAM

THIS SAMPLE DRAWING IS INFORMATIONAL ONLY AND COMPLETE TO THE DEGREE NECESSARY TO ILLUSTRATE A TYPE OF DRAWING. ACTUAL FORMAT AND DRAWING SHALL CONFORM TO THE TEXTUAL REQUIREMENTS SET FORTH IN THIS STANDARD.

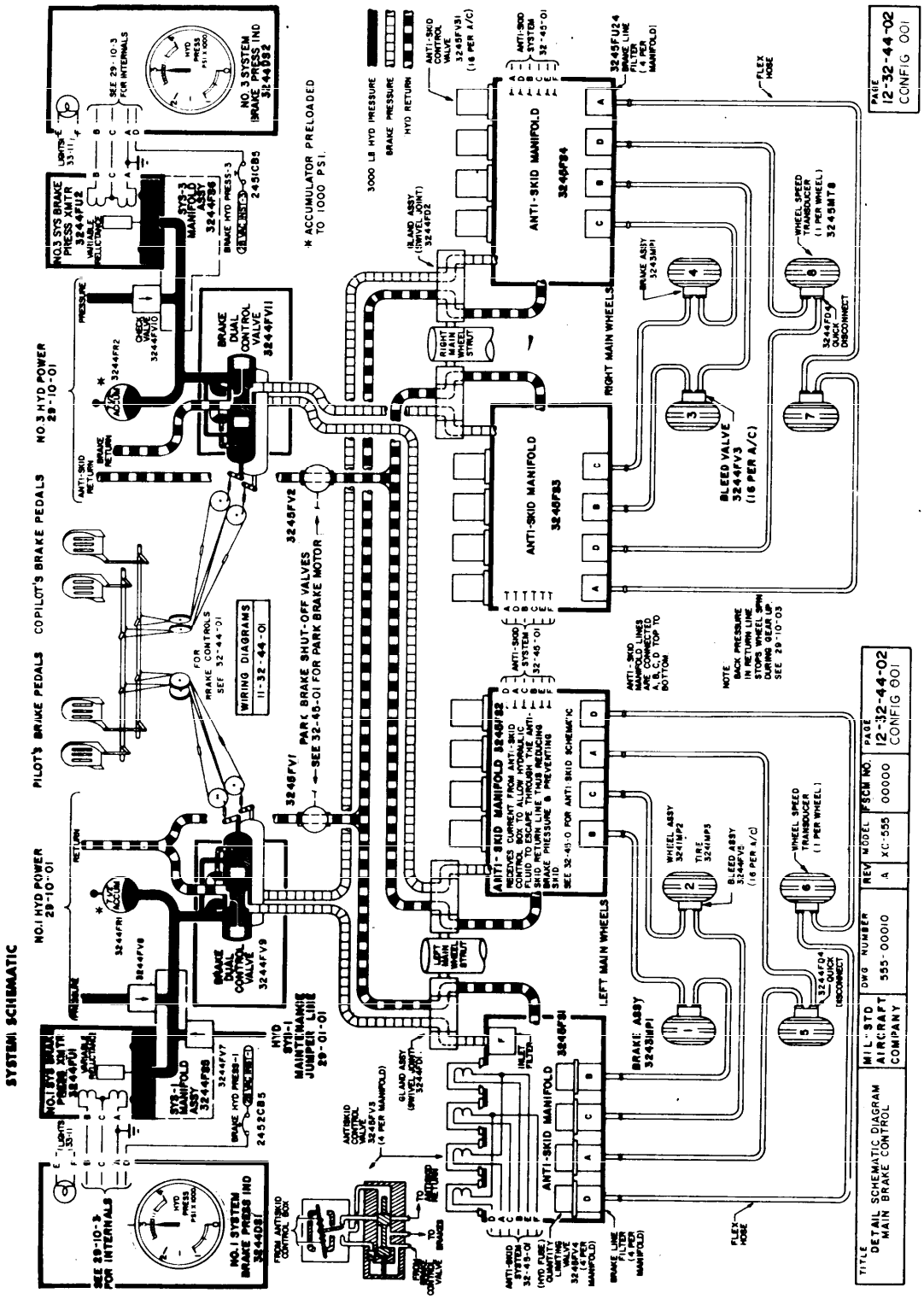

FIGURE 26. DETAILED SYSTEM SCHEMATIC DIAGRAM

THIS SAMPLE DRAWING IS INFORMATIONAL ONLY AND COMPLETE TO THE DEGREE NECESSARY TO ILLUSTRATE A TYPE OF DRAWING. ACTUAL FORMAT AND DRAWING SHALL CONFORM TO THE TEXTUAL REQUIREMENTS SET FORTH IN THIS STANDARD.

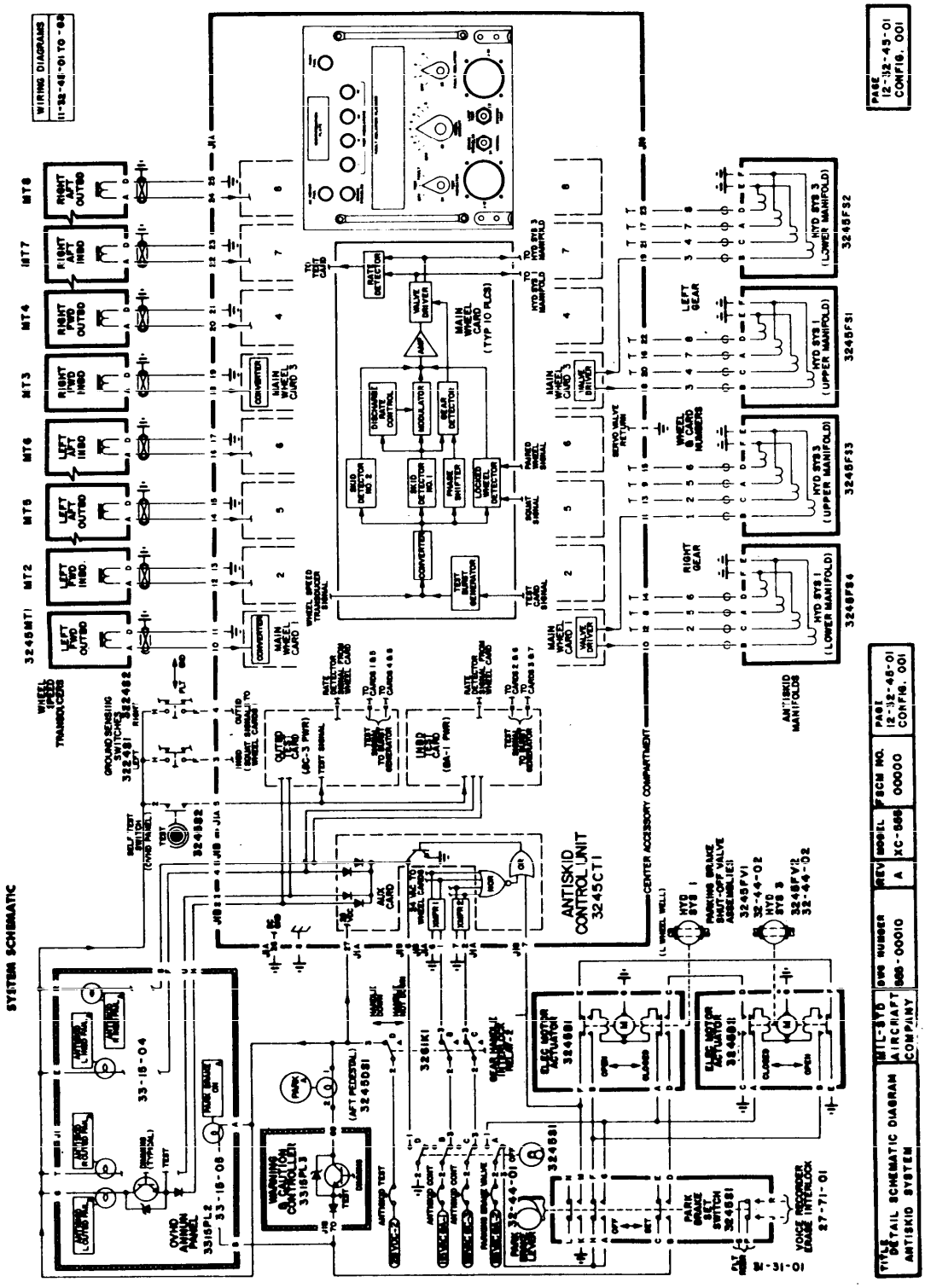

FIGURE 27. DETAIL SCHEMATIC DIAGRAM

THIS SAMPLE DRAWING IS INFORMATIONAL ONLY AND COMPLETE TO THE DEGREE NECESSARY TO ILLUSTRATE A TYPE OF DRAWING. ACTUAL FORMAT AND DRAWING SHALL CONFORM TO THE TEXTUAL REQUIREMENTS SET FORTH IN THIS STANDARD.

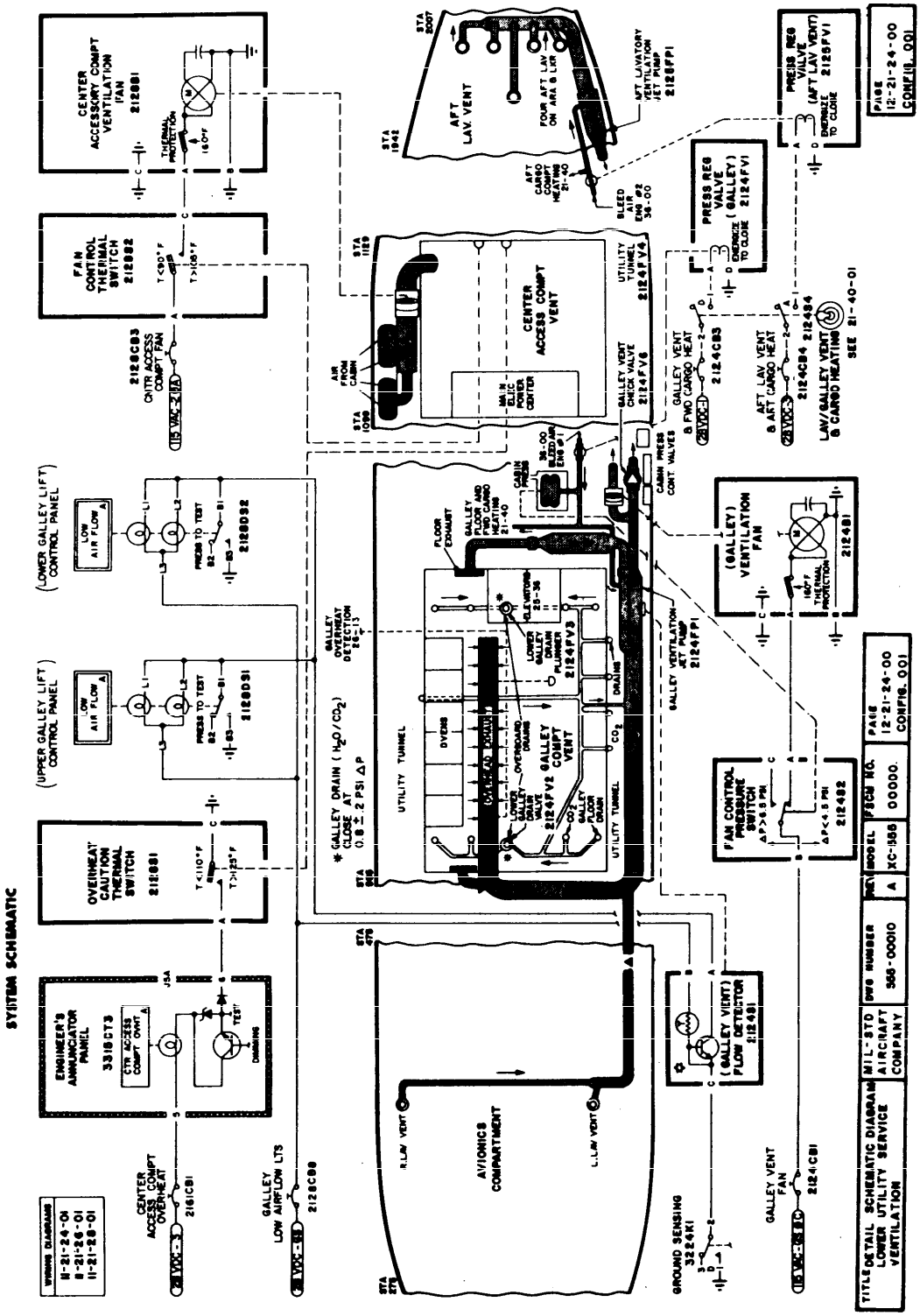

FIGURE 28. DETAIL SCHEMATIC DIAGRAM

THIS SAMPLE DRAWING IS INFORMATIONAL ONLY AND COMPLETE TO THE DEGREE NECESSARY TO ILLUSTRATE A TYPE OF DRAWING. ACTUAL FORMAT AND DRAWING SHALL CONFORM TO THE TEXTUAL REQUIREMENTS SET FORTH IN THIS STANDARD.

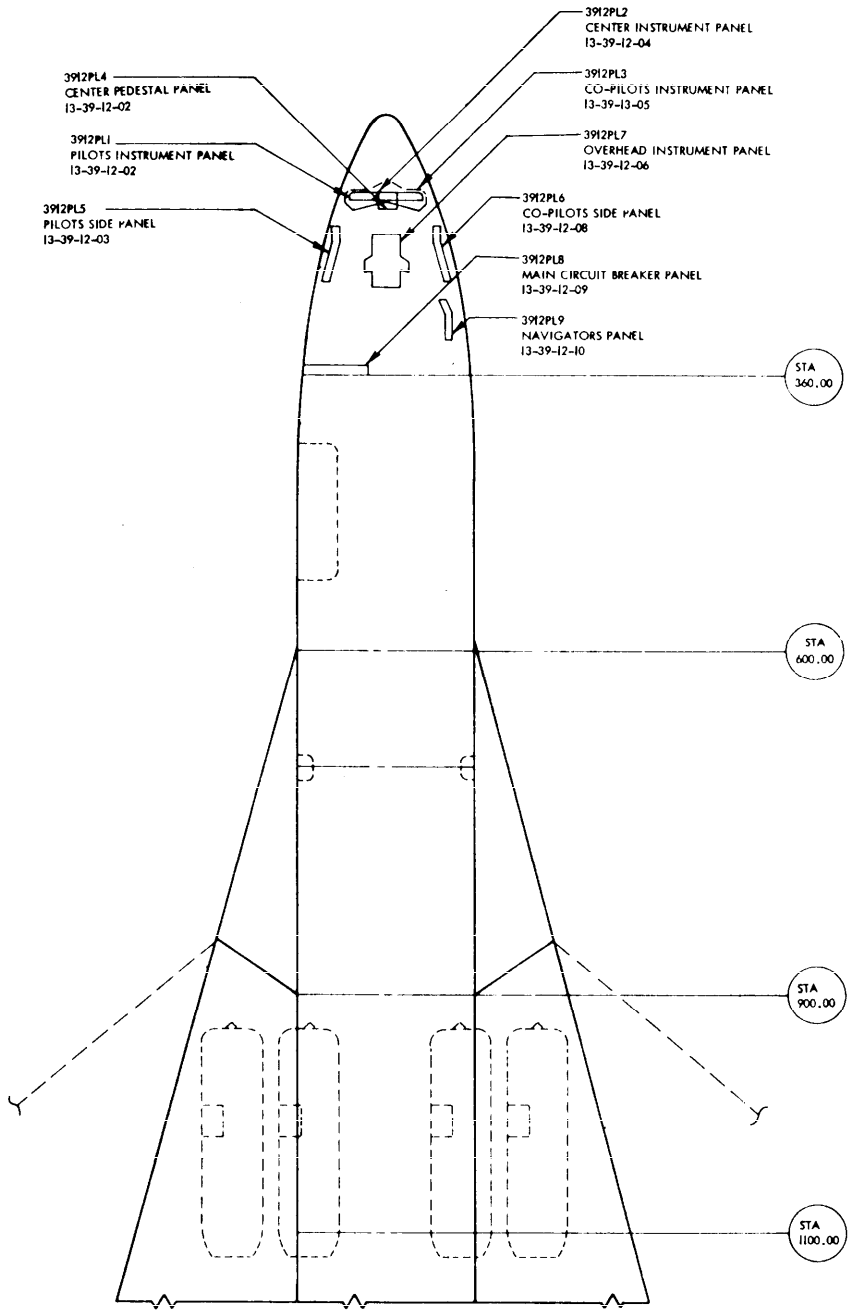

TITLE	MIL-STD	DRAWING NUMBER	REV	MODEL	FSCM NO.	PAGE
LOCATION DIAGRAM- PANELS-UPPER FUSELAGE	AIRCRAFT COMPANY	555-00010	B	XC-555	00000	13-39-12-01 CONFIG 001

FIGURE 29. EQUIPMENT LOCATION DIAGRAM

THIS SAMPLE DRAWING IS INFORMATIONAL ONLY AND COMPLETE TO THE DEGREE NECESSARY TO ILLUSTRATE A TYPE OF DRAWING. ACTUAL FORMAT AND DRAWING SHALL CONFORM TO THE TEXTUAL REQUIREMENTS SET FORTH IN THIS STANDARD.

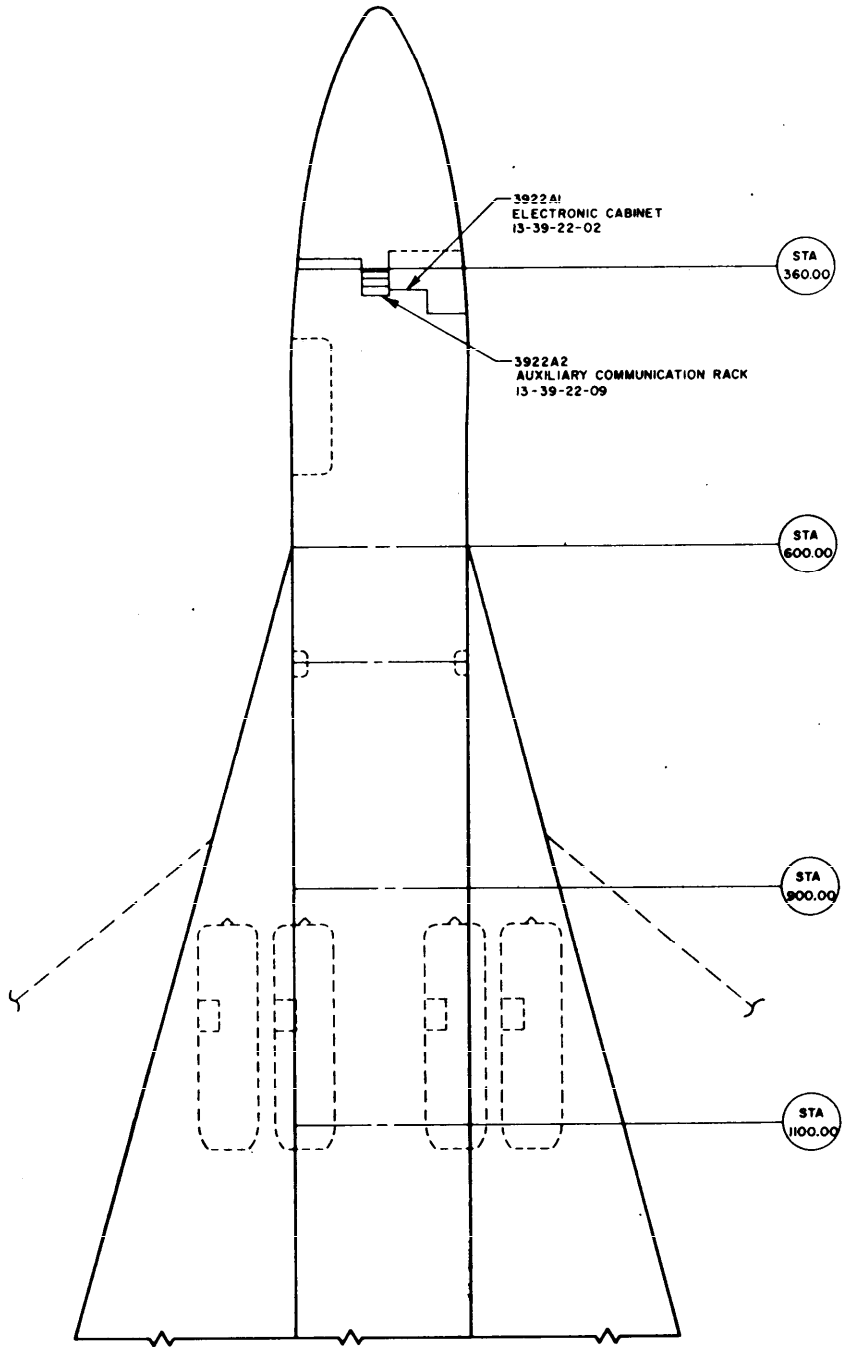

TITLE	MIL-STD AIRCRAFT COMPANY	DRAWING NUMBER	REV	MODEL	FSCM NO.	PAGE
LOCATION DIAGRAM- EQUIP. RACKS-UPPER FUSELAGE		555-00010	B	XC-555	00000	13-39-22-01 CONFIG 001

FIGURE 30. EQUIPMENT LOCATION DIAGRAM

THIS SAMPLE DRAWING IS INFORMATIONAL ONLY AND COMPLETE TO THE DEGREE NECESSARY TO ILLUSTRATE A TYPE OF DRAWING. ACTUAL FORMAT AND DRAWING SHALL CONFORM TO THE TEXTUAL REQUIREMENTS SET FORTH IN THIS STANDARD.

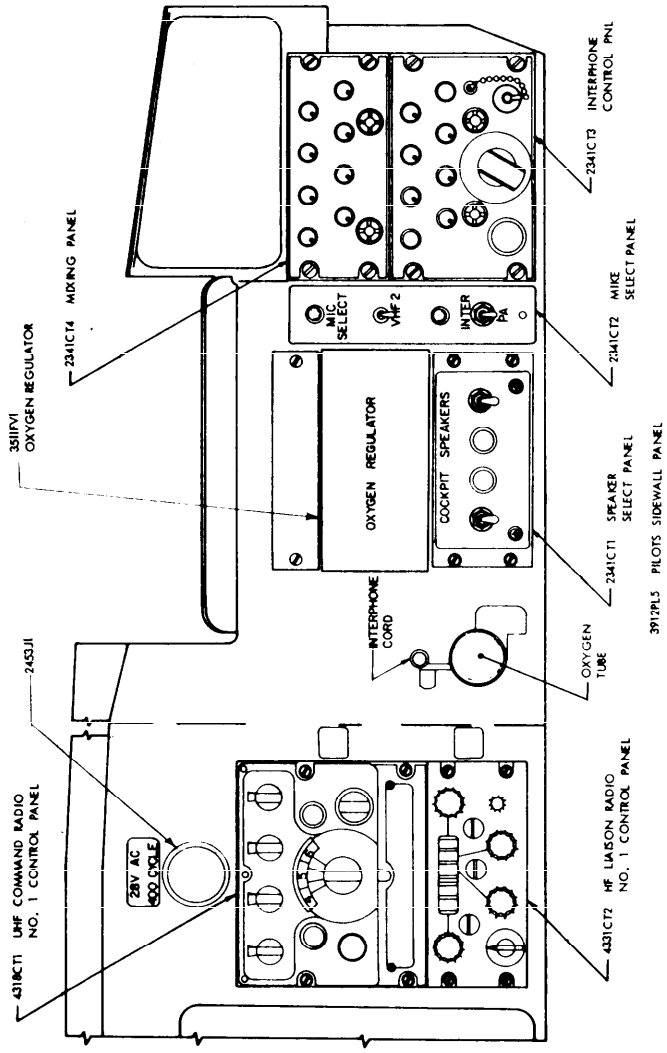

TITLE	MIL-STD	DRAWING NUMBER	REV	MODEL	CODE IDENT	PAGE
LOCATION CHART- PILOTS SIDEWALL PANEL(3912PL5)	AIRCRAFT COMPANY	555-00010	B	XC-555	00000	13-39-12-03 CONFIG-001

FIGURE 31. EQUIPMENT LOCATION DIAGRAM

THIS SAMPLE DRAWING IS INFORMATIONAL ONLY AND COMPLETE TO THE DEGREE NECESSARY TO ILLUSTRATE A TYPE OF DRAWING. ACTUAL FORMAT AND DRAWING SHALL CONFORM TO THE TEXTUAL REQUIREMENTS SET FORTH IN THIS STANDARD.

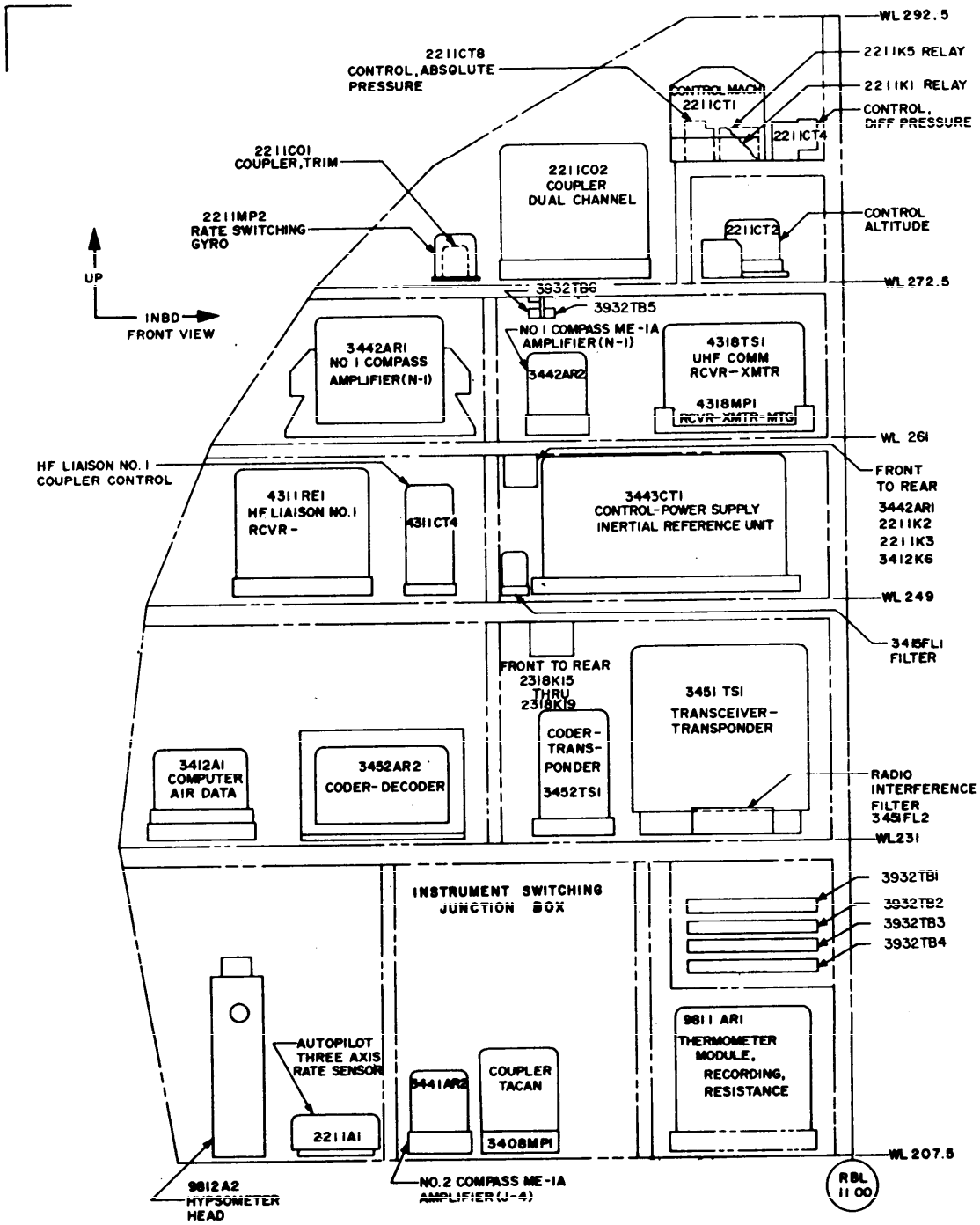

TITLE	MIL-STD	DRAWING NUMBER	REV	MODEL	CODE IDENT NO.	PAGE
CHART - ELECTRONICS CABINET EQUIPMENT LOCATION (FRONT VIEW) 3922A1	AIRCRAFT COMPANY	555-00010	A	XC-555A	00000	13-39-22-02 CONFIG-001

FIGURE 32. EQUIPMENT LOCATION DIAGRAM

THIS SAMPLE DRAWING IS INFORMATIONAL ONLY AND COMPLETE TO THE DEGREE NECESSARY TO ILLUSTRATE A TYPE OF DRAWING. ACTUAL FORMAT AND DRAWING SHALL CONFORM TO THE TEXTUAL REQUIREMENTS SET FORTH IN THIS STANDARD.

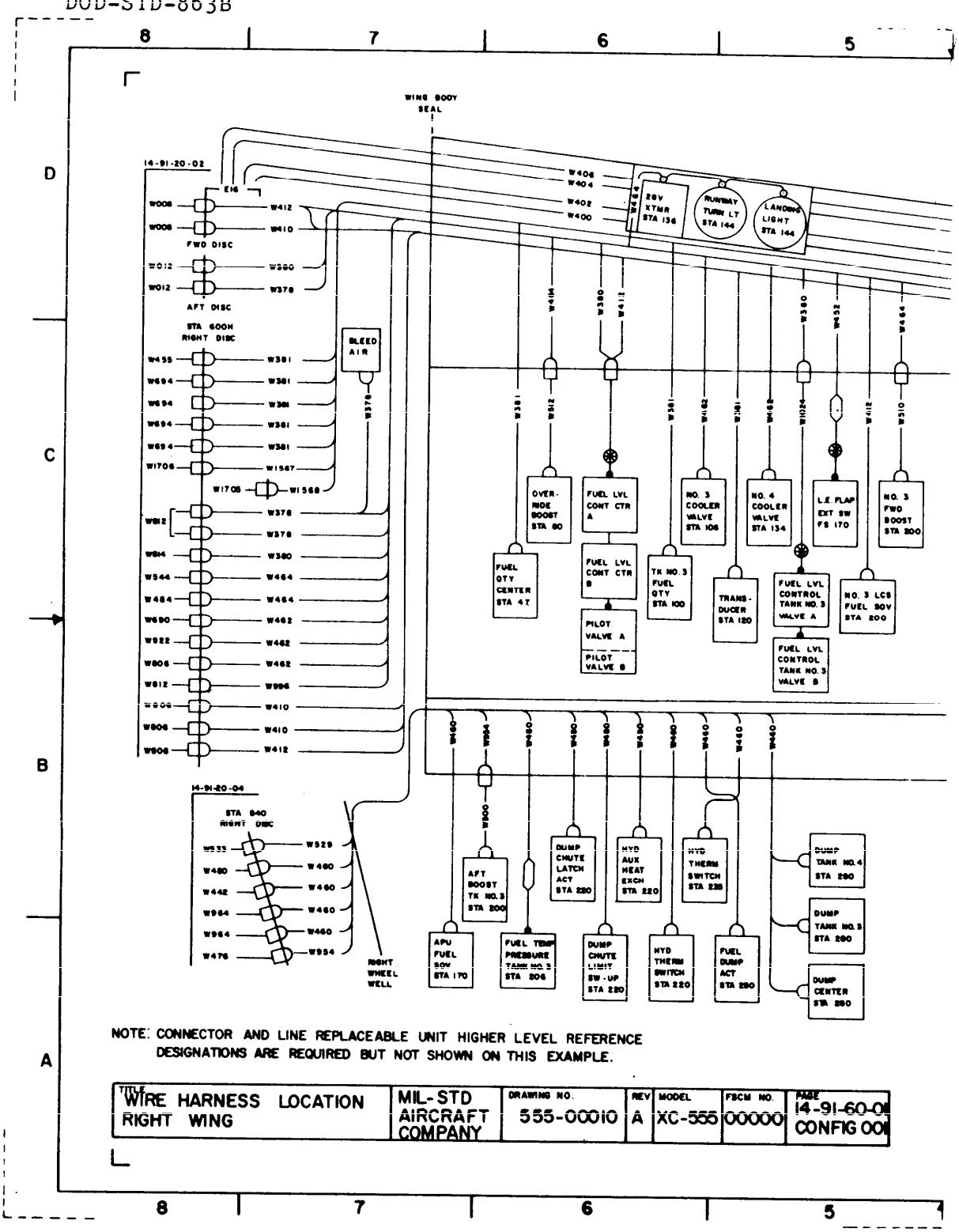

FIGURE 33. WIRE HARNESS LOCATION DIAGRAM (SHEET 1 OF 2)

THIS SAMPLE DRAWING IS INFORMATIONAL ONLY AND COMPLETE TO THE DEGREE NECESSARY TO ILLUSTRATE A TYPE OF DRAWING. ACTUAL FORMAT AND DRAWING SHALL CONFORM TO THE TEXTUAL REQUIREMENTS SET FORTH IN THIS STANDARD.

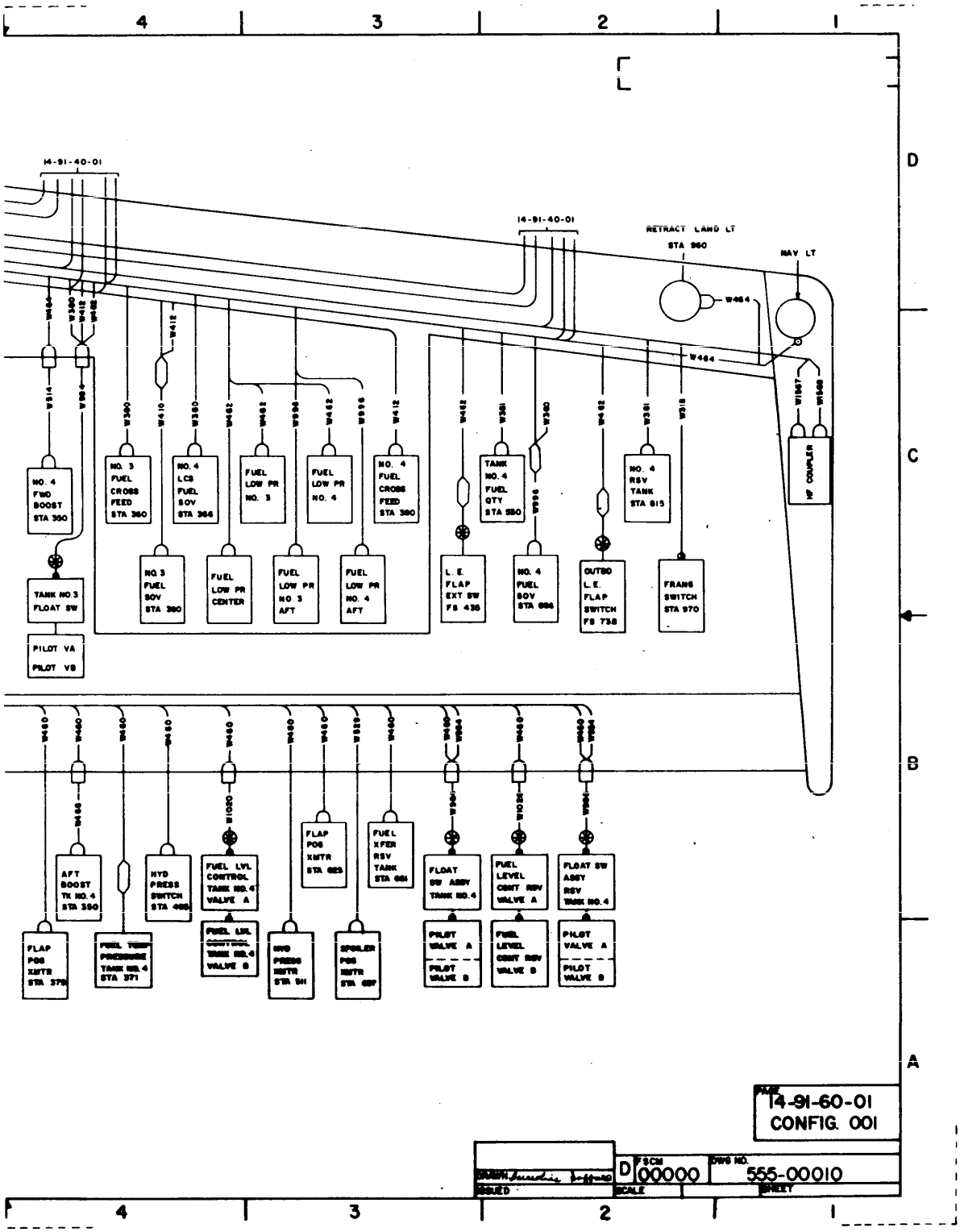

FIGURE 33. WIRE HARNESS LOCATION DIAGRAM (SHEET 2 OF 2)

THIS SAMPLE DRAWING IS INFORMATIONAL ONLY AND COMPLETE TO THE DEGREE NECESSARY TO ILLUSTRATE A TYPE OF DRAWING. ACTUAL FORMAT AND DRAWING SHALL CONFORM TO THE TEXTUAL REQUIREMENTS SET FORTH IN THIS STANDARD.

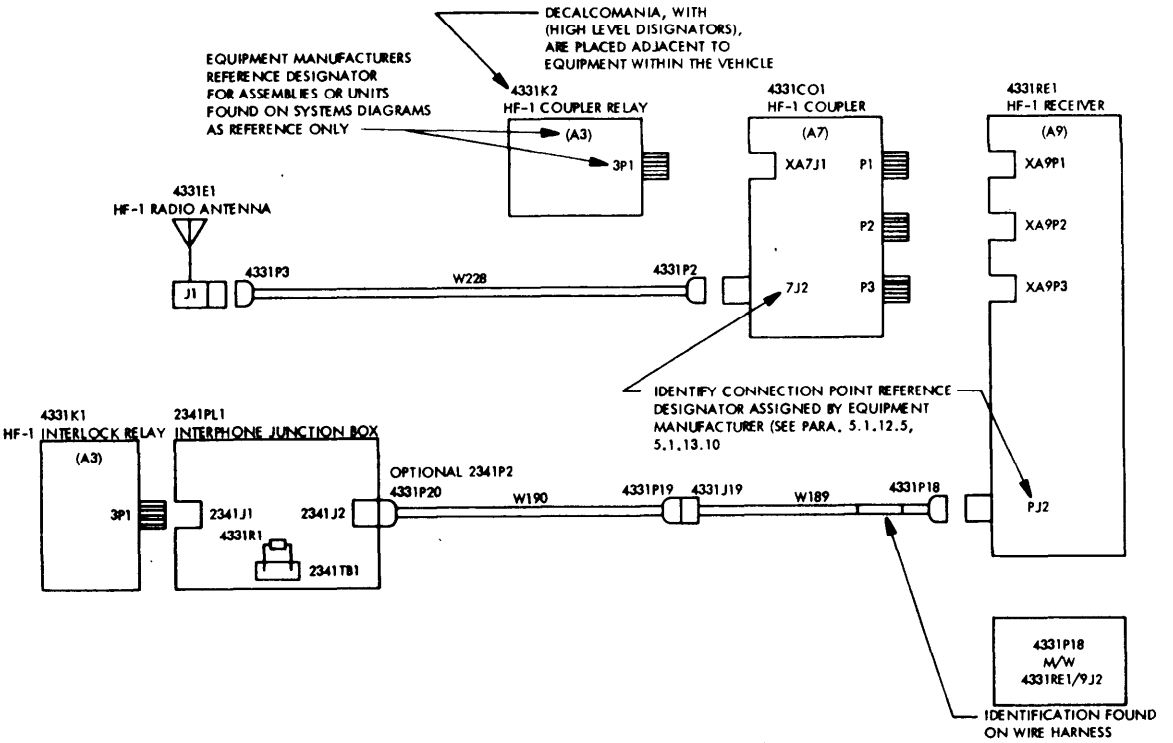

FIGURE 34. HIGHER LEVEL DESIGNATIONS (SYSTEM CODED)

FIGURE 35. TERMINAL SIZE SYMBOLS

THIS SAMPLE DRAWING IS INFORMATIONAL ONLY AND COMPLETE TO THE DEGREE NECESSARY TO ILLUSTRATE A TYPE OF DRAWING. ACTUAL FORMAT AND DRAWING SHALL CONFORM TO THE TEXTUAL REQUIREMENTS SET FORTH IN THIS STANDARD.